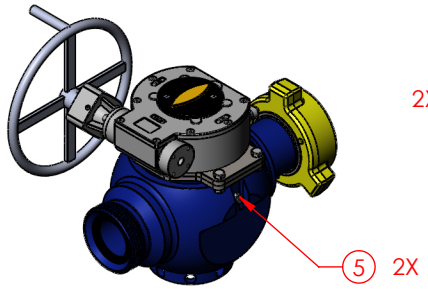

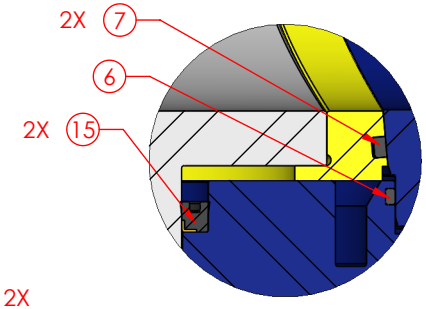

DETAIL B

ITEM NO.	QTY.	PART NUMBER	DESCRIPTION
1	1	AAG-4LT-6500	GEAR OP ASSY, PRO GEAR Q6500 4"LT VALVE
2	1	HC0006	FLAT WASHER, 1/2" STD
3	1	HC0007	FLAT WASHER, 1/2" FENDER (2"OD)
4	1	HC0009	HEX HD, 1/2"-20 x 1.00"
5	2	HC0226	GREASE FITTING, 3/4" SAFETAP H2S GBH
6	1	OC0047	O-RING, 4" ADJ NUT STD (2-264 BUNA 90)
7	2	OC0048	O-RING, 4" INSERT STD (2-351 BUNA 90)
8	1	UC0241	RESILIENT SEAL, 4"602/1002/1502 STD (BUNA)
9	1	UC0289	WINGNUT, 4"1502 STD
10	1	UC0290	NUT RETAINER SET, 4"1502
11	1	UC0291	SPIRAL RETAINER RING, 4"1502
12	1	VC0310	4" PLUG STD
13	1	VC0311S	INSERT SET, 4" STD (SPLIT)
14	1	VC0312	ADJUSTING NUT, 4" H2S
15	2	VC0313	PLUG SEAL, 4" - 5" STD (BUNA/BRASS)
16	1	VC0319	VLV BODY, 4" x 4"1502 STD 15M

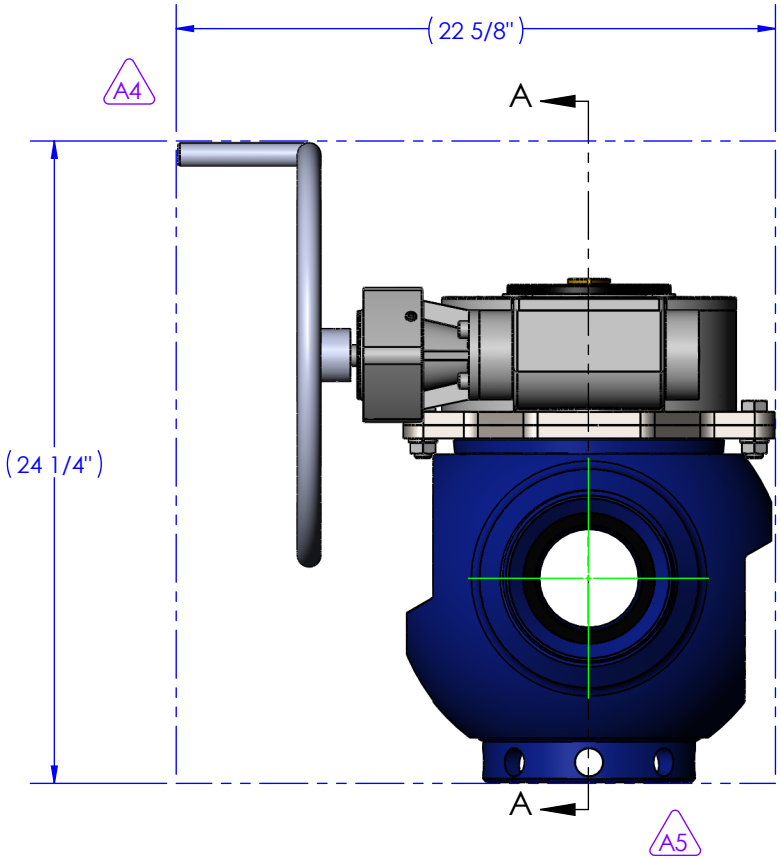

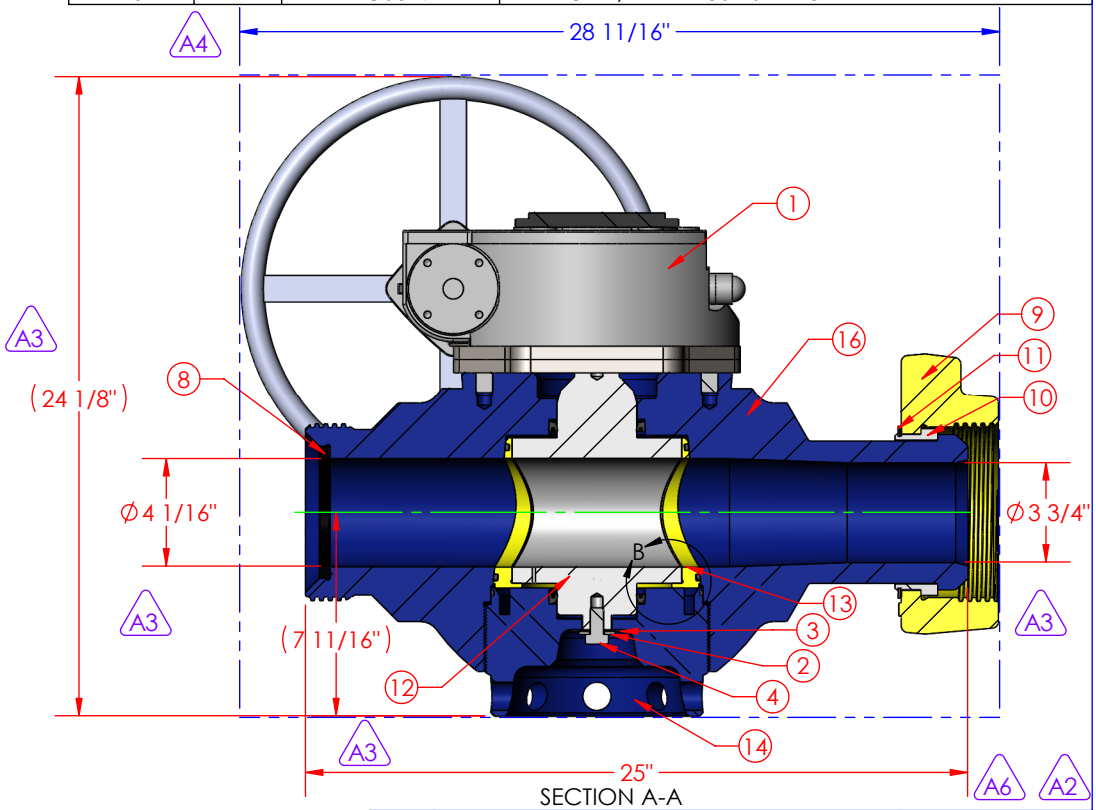

SECTION A-A

ECN NUMBER	DESCRIPTION
5071	VALVE, 4" x 4"1502 STD 15M (GEAR OP HWTS)

CHANGE MADE	REVISED BY	DATE
1) REPLACED AA0007 WITH AAG-4LT-6500 2) UPDATED VC0319 WITH CURRENTLY REVISION (GREASE FITTING PROTECTION) 3) DIMS WERE DECIMAL: NOW FRACTIONAL 4) ADDED BOX DIMENIONS 5) ADDED PARENT VIEW 6) UPDATED DRAWING TEMPLATE 7)	RSE	05/01/2014

WORKING PRESSURE:	TEMPERATURE CLASS:	DRAWN BY
15,000 PSI	PU	KB
RETAINED FLUIDS:	**PR LEVEL:**	**DATE**
AA	1	11/7/03
WEIGHT	**SHEET**	**PART NUMBER** / **REV**
618 lbs.	SHEET 1 OF 1	VA0518-S / A

MSI
300 WEST MAIN ST.
ALICE, TX 78332
www.diwmsi.com
800.242.0059
MSI IS A DIVISION OF DIXIE IRON WORKS, LTD.

THIS DRAWING IS THE PROPERTY OF DIXIE IRON WORKS, LTD. THE BORROWER AGREES BY RECEIVING THE DRAWING TO RETURN IT UPON REQUEST AND TO NEITHER REPRODUCE COPY OR FURNISH INFORMATION FROM IT TO OTHERS WITHOUT EXPRESSED WRITTEN PERMISSION OF DIXIE IRON WORKS, LTD. ALL ARTICLES MANUFACTURED IN ACCORDANCE WITH THIS DRAWING SHALL BE CONSIDERED DESIGNS OF DIXIE IRON WORKS, LTD. AND MAY NOT BE USED OR SOLD WITHOUT DIXIE IRON WORKS, LTD. WRITTEN PERMISSION.